PAPER – 2 : STRATEGIC FINANCIAL MANAGEMENT

QUESTIONS

Foreign Exchange Risk Management

1. Zaz plc, a UK Company is in the process of negotiating an order amounting €2.8 million with a large German retailer on 6 month's credit. If successful, this will be first time for Zaz has exported goods into the highly competitive German Market. The Zaz is considering following 3 alternatives for managing the transaction risk before the order is finalized.

   (a) Mr. Peter the Marketing head has suggested that in order to remove transaction risk completely Zaz should invoice the German firm in Sterling using the current €/£ spot rate to calculate the invoice amount.

   (b) Mr. Wilson, CE is doubtful about Mr. Peter's proposal and suggested an alternative of invoicing the German firm in € and using a forward exchange contract to hedge the transaction risk.

   (c) Ms. Karen, CFO is agreed with the proposal of Mr. Wilson to invoice the German first in €, but she is of opinion that Zaz should use sufficient 6 month sterling further contracts (to the nearest whole number) to hedge the transaction risk.

   Following data is available

Sport Rate	€ 1.1960 - €1.1970/£
6 months forward premium	0.60- 0.55 Euro Cents.
6 month further contract is currently trading at	€ 1.1943/£
6 month future contract size is	£62,500
Spot rate and 6 month future rate	€ 1.1873/£

   You are required to

   (i) Calculate (to the nearest £) the £ receipt for Zaz plc, under each of 3 above proposals.

   (ii) In your opinion which alternative you consider to be most appropriate.

Security Valuation

2. (a) Suppose Mr. X purchase Treasury Bill for Rs. 9,940 maturing in 91 days for ₹ 10,000. Then what would be annualized investment rate for Mr. X and annualized discount rate for the Govt. Investment.

   (b) Suppose Govt. pays ₹ 5,000 at maturity for 91 days Treasury Bill. If Mr. Y is desirous to earn an annualized discount rate of 3.5%, then how he can pay for it.

© The Institute of Chartered Accountants of India

Swap

3. Euroloan Bank has a differential advantage in issuing variable-rate loans, but wishes to avoid the income risk associated with such loan. Currently bank has a portfolio €25,000,000 loans with PLR + 150bp, reset monthly PLR is currently 4%.

   IB an investment bank has arranged for Euroloan to swap into a fixed interest payment of 6.5% on notional amount of loan for its variable interest income. If Euroloan agrees to this, what amount of interest is received and given in the first month? Further, assume that PLR increased by 200 bp.

4. A Ltd. is considering a ₹ 50 crores 3 year interest rate swap. The company is interested in borrowing at floating rate however, due to its good credit rating, it has a comparative over lower rated companies in fixed rate market. It can borrow at fixed rate of 6.25% or floating rate MIBOR+0.75%.

   Presently, MIBOR is 5.25% but is expected to change in 6 months due to political situation in the country. X Ltd. an intermediary bank agreed to arrange a swap. The bank will offset the swap risk with a counter party (B. Ltd.) a comparative lower credit rated company, which could borrow at a fixed rate of 7.25% and floating rate of MIBOR + 1.25%. X Ltd. would charge ₹ 12,00,000 per year as its fee from each party. Mr. Fin the CFO, of A Ltd. desires that A Ltd. should receive 60% of any arbitrage saving (before payment of fees) from the swap as A Ltd. enjoying high credit rating.

   Any fees paid to the bank are tax allowable. The applicable tax rate is 30%.

   You are required to:

   (a) Evaluate whether the proposal is beneficial for both parties or not.

   (b) Assuming that MIBOR was to increase to 5.75% immediately after political crisis over and shall remain constant for the period of swap. Evaluate the present value of savings from the swap for A Ltd., assuming that interest payment are made semi-annually in arrears.

Mutual Funds

5. On 1st April 2009 Fair Return Mutual Fund has the following assets and prices at 4.00 p.m.

Shares	No. of Shares	Market Price Per Share (₹)
A Ltd.	10000	19.70
B Ltd.	50000	482.60
C Ltd.	10000	264.40
D Ltd.	100000	674.90
E Ltd.	30000	25.90
No. of units of fund		8,00,000

© The Institute of Chartered Accountants of India

Please calculate:

(a) NAV of the Fund.

(b) Assuming Mr. X, a HNI, send a cheque of ₹ 50,00,000 to the Fund and Fund Manager purchases 18000 shares of C Ltd. and balance is held in bank. Then what will be position of fund.

(c) Now suppose on 2 April 2009 at 4.00 p.m. the market price of shares is as follows:

Shares	₹
A Ltd.	20.30
B Ltd.	513.70
C Ltd.	290.80
D Ltd.	671.90
E Ltd.	44.20

Then what will be new NAV.

Portfolio Management

6. Assuming that shares of ABC Ltd. and XYZ Ltd. are correctly priced according to Capital Asset Pricing Model. The expected return from and Beta of these shares are as follows:

Share	Beta	Expected return
ABC	1.2	19.8%
XYZ	0.9	17.1%

You are required to derive Security Market Line.

7. The following information is available for the share of X Ltd. and stock exchange for the last 4 years.

	X Ltd.		Index of Stock Exchange	Return from Market funds	Return from Govt. Securities
	Share Price	Divided Yield			
Present Year	197.00	10%	2182	16%	15%
1 year ago	164.20	12%	1983	15%	15%
2 year ago	155.00	8%	1665	16%	16%
3 year ago	121.00	10%	1789	10%	14%
4 year ago	95.00	10%	1490	18%	15%

© The Institute of Chartered Accountants of India

With above information available please calculate:

(i) Expected Return on X Ltd.'s share.

(ii) Expected Return on Market Index.

(iii) Risk Free Rate of Return

(iv) Beta of X Ltd.

Merger and Acquisition

8. There are two companies ABC Ltd. and XYZ Ltd. are in same in industry. On order to increase its size ABC Ltd. made a takeover bid for XYZ Ltd.

Equity beta of ABC and XYZ is 1.2 and 1.05 respectively. Risk Free Rate of Return is 10% and Market Rate of Return is 16%. The growth rate of earnings after tax of ABC Ltd. in recent years has been 15% and XYZ's is 12%. Further both companies had continuously followed constant dividend policy.

Mr. V, the CEO of ABC requires information about how much premium above the current market price to offer for XYZ's shares.

Two suggestions have forwarded by merchant bankers.

(i) Price based on XYZ's net worth as per B/S, adjusted in light of current value of assets and estimated after tax profit for the next 5 years.

(ii) Price based on Dividend Valuation Model, using existing growth rate estimates.

Summarised Balance Sheet of both companies is as follows.

(₹ In lacs)

	ABC Ltd.	XYZ Ltd.		ABC Ltd.	XYZ Ltd.
Equity Share Capital	2,000	1,000	Land & Building	5,600	1,500
General Reserves	4,000	3,000	Plant & Machinery	7,200	2,800
Share Premium	4,200	2,200			
Long Term Loans	5,200	1,000			
Current Liabilities			Current Assets		
Sundry Creditors	2,000	1,100	Accounts Receivable	3,400	2,400
Bank Overdraft	300	100	Stock	3,000	2,100
Tax Payable	1,200	400	Bank/Cash	200	400
Dividend Payable	500	400		-	-
	19,400	9,200		19,400	9,200

© The Institute of Chartered Accountants of India

Profit & Loss A/c

(₹ In lacs)

	ABC Ltd.	XYZ Ltd.		ABC Ltd.	XYZ Ltd.
To Net Interest	1,200	220	By Net Profit	7,000	2,550
To Taxation	2,030	820			
To Distributable Profit	3,770	1,510		-	-
	7,000	2,550		7,000	2,550
To Dividend	1,130	760	By Distributable Profit	3,770	1,510
To Balance c/d	2,640	750		-	-
	3,770	1,510		3,770	1,510

Additional information

(1) ABC Ltd.'s land & building have been recently revalued. XYZ Ltd.'s have not been revalued for 4 years, and during this period the average value of land & building have increased by 25% p.a.

(2) The face value of share of ABC Ltd. is ₹ 10 and of XYZ Ltd. is ₹ 25 per share.

(3) The current market price of shares of ABC Ltd. is ₹ 310 and of XYZ Ltd.'s ₹ 470 per share.

With the help of above data and given information you are required to calculate the premium per share above XYZ's current share price by two suggested valuation methods. Discuss which of these two values should be used for bidding the XYZ's shares.

State the assumptions clearly, you make.

Economic Value Added

9. ABC Ltd. has divisions A,B & C. The division C has recently reported on annual operating profit of ₹ 20,20,00,000. This figure arrived at after charging ₹ 3 crores full cost of advertisement expenditure for launching a new product. The benefits of this expenditure is expected to be lasted for 3 years.

The cost of capital of division C is ₹ 11% and cost of debt is 8%.

The Net Assets (Invested Capital) of Division C as per latest Balance Sheet is ₹ 60 crore, but replacement cost of these assets is estimated at ₹ 84 crore.

You are required to compute EVA of the Division C.

© The Institute of Chartered Accountants of India

Futures

10. Mr. V decides to sell short 10000 shares of ABC plc, when it was selling at yearly high of £5.60. His broker requested him to deposit a margin requirement of 45% and commission of £1550 while Mr. V was short the share, the ABC paid a dividend of £0.25 per share. At the end of one year Mr. V buys 1000 shares of ABC plc at £4.50 to close out position and was charged a commission of £1450.

    You are required to calculate the return on investment of Mr. V.

Lease Vs. Borrow and Buy

11. GMBH is in software development business. It has recently been awarded a contract from an Asian country for computerization of its all offices and branches spread across the country. This will necessitates acquisition of a super computer at a total cost of ₹ 10 crore. The expected life of computer is 5 years. The scrap value is estimated at ₹ 5 crore. However, this value could even be much lower depending upon the developments taking place in the field of computer technology.

    A leasing company has offered a lease contract will total lease rent of ₹ 1.5 crore per annum for 5 years payable in advance with all maintenance costs being borne by leasee.

    The other option available is to purchase the computer by taking loan from the bank with variable interest payment payable semi-annually in arrears at a margin of 1% per annuam above MIBOR. The MIBOR forecast to be at a flat rate of 2.4% for each 6 month period, for the duration of loan.

    Tax rate applicable to corporation is 30%. For taxation purpose depreciation on computer is allowed at 20% as per WDV method, with a delay of 1 year between the tax depreciation allowance arising and deduction from tax paid.

    You are required to calculate:

    (a) Compound annualized post tax Cost of Debt.

    (b) NPV of lease payment Vs. purchase decisions at discount rate of 4% and 5%.

    (c) The break even post tax Cost of debt at which corporation will be indifferent between leasing and purchasing the computer.

    (d) Which option should be opted for.

Equity Beta

12. The total market value of the equity share of O.R.E. Company is ₹ 60,00,000 and the total value of the debt is ₹ 40,00,000. The treasurer estimate that the beta of the stock is currently 1.5 and that the expected risk premium on the market is 10 per cent. The treasury bill rate is 8 per cent.

    Required:

    (1) What is the beta of the Company's existing portfolio of assets?

© The Institute of Chartered Accountants of India

(2) Estimate the Company's Cost of capital and the discount rate for an expansion of the company's present business.

Capital Budgeting (Decision Tree)

13. Mr. Chander Shekhar own a small piece of an unused zinc mine that will cost ₹ 1,00,000 to again start. If he opens the mine, he expects to be able to extract 1,000 kgs of zinc a year for 3 years. After that the deposit will be exhausted. The prize of zinc is currently ₹ 500 per kg. and each year chances that the price is likely to rise or fall by ₹ 50 is equally likely. The cost of extraction per kg. of zinc is ₹ 460.

Assuming hurdle rate as 10 % determine whether Mr. Shekhar should open the mine now or postpone his decision by one year in the hope of rise of the price of zinc.

Share Valuation

14. Given below is the Balance Sheet of S Ltd. as on 31.3.2010:

Liabilities	₹ (in lakh)	Assets	₹ (in lakh)
Share capital	100	Land and building	40
(Share of ₹ 10)		Plant and machinery	80
Reserves and surplus	40	Investments	10
Creditors	30	Stock	20
		Debtors	15
		Cash at bank	5
	170		170

You are required to work out the value of the Company's, shares on the basis of Net Assets method and Profit-earning capacity (capitalization) method and arrive at the fair price of the shares, by considering the following information:

(i) Profit for the current year ₹ 64 lakhs includes ₹ 4 lakhs extraordinary income and ₹ 1 lakh income from investments of surplus funds; such surplus funds are unlikely to recur.

(ii) In subsequent years, additional advertisement expenses of ₹ 5 lakhs are expected to be incurred each year.

(iii) Market value of Land and Building and Plant and Machinery have been ascertained at ₹ 96 lakhs and ₹ 100 lakhs respectively. This will entail additional depreciation of ₹ 6 lakhs each year.

(iv) Effective Income-tax rate is 30%.

(v) The capitalization rate applicable to similar businesses is 15%.

Bond Valuation

15. The following data are available for a bond

© The Institute of Chartered Accountants of India

Face value	₹ 1,000
Coupon Rate	16%
Years to Maturity	6
Redemption value	₹ 1,000
Yield to maturity	17%

What is the current market price, duration and volatility of this bond? Calculate the expected market price, if increase in required yield is by 75 basis points.

16. M Ltd. has to make a payment on 30th January, 2011 of ₹ 80 lakhs. It has surplus cash today, i.e. 31st October, 2010; and has decided to invest sufficient cash in a bank's Certificate of Deposit scheme offering an yield of 8% p.a. on simple interest basis. What is the amount to be invested now?

17. ABC Ltd. has ₹ 300 million, 12 per cent bonds outstanding with six years remaining to maturity. Since interest rates are falling, ABC Ltd. is contemplating of refunding these bonds with a ₹ 300 million issue of 6 year bonds carrying a coupon rate of 10 per cent. Issue cost of the new bond will be ₹ 6 million and the call premium is 4 per cent. ₹ 9 million being the unamortized portion of issue cost of old bonds can be written off no sooner the old bonds are called off. Marginal tax rate of ABC Ltd. is 30 per cent. You are required to analyse the bond refunding decision.

Share Valuation

18. Following Financial data are available for PQR Ltd. for the year 2008 :

	(₹ in lakh)
8% debentures	125
10% bonds (2007)	50
Equity shares (Rs. 10 each)	100
Reserves and Surplus	300
Total Assets	600
Assets Turnovers ratio	1.1
Effective interest rate	8%
Effective tax rate	40%
Operating margin	10%
Dividend payout ratio	16.67%
Current market Price of Share	14
Required rate of return of investors	15%

You are required to:

(i) Draw income statement for the year

© The Institute of Chartered Accountants of India

(ii) Calculate its sustainable growth rate

(iii) Calculate the fair price of the Company's share using dividend discount model, and

(iv) What is your opinion on investment in the company's share at current price?

Option Valuation

19. Following information is available for X Company's shares and Call option:

Current share price	₹ 185
Option exercise price	₹ 170
Risk free interest rate	7%
Time of the expiry of option	3 years
Standard deviation	0.18

Calculate the value of option using Black-Scholes formula.

20. Write a short note on

(a) Random Walk Theory

(b) Three forms of Efficient Market Hypothesis

(c) Green Shoe Option

(d) Functions of Merchant Bankers

(e) Sensitivity analysis in Capital Budgeting

SUGGESTED ANSWERS/HINTS

1. (i) Receipt under three proposals

(a) Proposal of Mr. Peter

Invoicing in £ will produce = $\frac{€\,2.8\,\text{million}}{1.1970}$ = £2.339 million

(b) Proposal of Mr. Wilson

Forward Rate = €1.1970-0.0055 = 1.1915

Using Forward Market hedge Sterling receipt would be $\frac{€\,2.8\,\text{million}}{1.1915}$ = £ 2.35 million

(c) Proposal of Ms. Karen

© The Institute of Chartered Accountants of India

The equivalent sterling of the order placed based on future price (€1.1943) = $\frac{€2.8\text{million}}{1.1943}$ = £ 2,344,470 (rounded off)

Number of Contracts = $\frac{£2,344,470}{62,500}$ = 37 Contracts (to the nearest whole number)

Thus, € amount hedged by future contract will be = 37´ £62,500 = £23,12,500

Buy Future at €1.1943

Sell Future at €1.1873

€0.0070

Total loss on Future Contracts = 37´ £62,500´ €0.0070 = €16,188

After 6 months

Amount Received	€28,00,000
Less: Loss on Future Contracts	€ 16,188
	€ 27,83,812

Sterling Receipts

On sale of € at spot = $\frac{€27,83,812}{1.1873}$ = £ 2.3446 million

(ii) Proposal of option (b) is preferable because the option (a) & (c) produces least receipts. Further, in case of proposal (a) there must be a doubt as to whether this would be acceptable to German firm as it is described as a competitive market and Zaz is moving into it first time.

2. (a) Investment Rate = $\frac{₹\ 10,000 - ₹\ 9,940}{₹\ 9,940} \times \frac{365}{91}$ = 0.02421 i.e. 2.42 %

Discount Rate = $\frac{₹10,000 - ₹\ 9,940}{₹\ 10,000} \times \frac{360}{91}$ = 0.02374 i.e. 2.374 %

(b) Suppose X be the maximum amount Mr. Y can pay for Treasury Bill. Then,

$\frac{₹\ 5,000 - X}{₹\ 5,000} \times \frac{360}{91} = 0.035$

₹ 5,000 - X = ₹ 44.24

X = ₹ 4,955.76

© The Institute of Chartered Accountants of India

3. Euroloan earns = €25,000,000 ´ $\frac{0.055}{12}$ = €114,583.33

This amount will be swapped in exchange of €25,000,000 ´ $\frac{0.065}{12}$ = €135,416.67

If PLR jumps by 200 bp, Euroloan earns €25,000,000 ´ $\frac{0.075}{12}$ = €156,250

This amount will be returned to IB and will get €135,416.67

Thus, with increase in PLR, bank shall loose.

4. (a) Swap Position

	Fixed Rate	Floating Rate
A Ltd.	6.25%	MIBOR +0.75%
B Ltd.	7.25%	MIBOR +1.25%
Difference	1.00%	0.50%

Thus, there is potential saving of 0.50% from the swap proposal.

	₹
Saving on the amount of loan (₹ 50 Crores x 0.50%)	25,00,000
Evaluation from A Ltd.s Point of view	
Share of A Ltd. in benefit (60% of ₹ 25,00,000)	15,00,000
Post Tax benefit (70% of ₹ 15,00,000) (A)	10,50,000
Chares payable to X Ltd. (Bank)	12,00,000
Post tax charges (70% of ₹ 12,00,000) (B)	8,40,000
Net Benefit (A)-(B)	2,10,000
Evaluation from B. Ltd.s Point of view	
Share of B Ltd. in benefit (40% of ₹ 25,00,000)	10,00,000
Post Tax benefit (70% of ₹ 10,00,000) (A)	7,00,000
Charges payable to X Ltd. (Bank)	12,00,000
Post tax charges payable (B)	8,40,000
Net Benefit (A)-(B)	(1,40,000)

Thus, the proposal of swap will leave B Ltd. in a loss of ₹ 1,40,000.

Hence, the proposal is not beneficial for all parties at all.

(b) A Ltd. will pay floating rate as a result of swap. If A Ltd. receives 60% of the arbitrage saving, it will save 0.3% (0.60) of its rates comparing to borrowing in

© The Institute of Chartered Accountants of India

floating rate market and shall effectively pay MIBOR + 0.45% or 5.70% at current rates. If MIBOR moves to 5.75% in 6 months time A Ltd. will then pay 6.20% floating interest rate for the remaining swap period.

Interest Saving (6 months) ₹ 50 crore x 0.30% x 0.5 = ₹ 7,50,000

Assuming that market is efficient, the relevant discount rate will be prevailing interest paid by A Ltd.

The present value of saving from swap will be as follows:

	Period	Saving (₹)	PVF	Present Value (₹)
1	6 months	7,50,000	0.972(@5.7%)	7,29,000
2	6 months	7,50,000	0.941(@6.2%)	7,05,750
3	6 months	7,50,000	0.912(@6.2%)	6,84,000
4	6 months	7,50,000	0.885 (@6.2%)	6,63,750
5	6 months	7,50,000	0.858 (@ 6.2%)	6,43,500
6	6 months	7,50,000	0.833 (@ 6.2%)	6,24,750
				40,50,750

The interest rate swap is estimated to produce interest rate saving with present value of ₹ 40,50,750 relative to borrowing floating rate directly. Thus, swap would be beneficial for A Ltd. even after a payment of ₹ 12,00,000 as charges per year.

5. (a) NAV of the Fund.

$$= \frac{₹1,97,000 + ₹\ 2,41,30,000 + ₹\ 26,44,000 + ₹\ 6,74,90,000 + ₹\ 7,77,000}{800000}$$

$$= \frac{₹\ 9,52,38,000}{800000} = ₹\ 119.0475 \text{ rounded to } ₹\ 119.05$$

(b) The revised position of fund shall be as follows:

Shares	No. of shares	Price	Amount (₹)
A Ltd.	10000	19.70	1,97,000
B Ltd.	50000	482.60	2,41,30,000
C Ltd.	28000	264.40	74,03,200
D Ltd.	100000	674.90	674,90,000
E Ltd.	30000	25.90	7,77,000
Cash			2,40,800
			10,02,38,000

© The Institute of Chartered Accountants of India

No. of units of fund = $800000 + \frac{5000000}{119.0475} = 842000$

(c) On 2nd April 2009, the NAV of fund will be as follows:

Shares	No. of shares	Price	Amount (₹)
A Ltd.	10000	20.30	2,03,000
B Ltd.	50000	513.70	2,56,85,000
C Ltd.	28000	290.80	81,42,400
D Ltd.	100000	671.90	6,71,90,000
E Ltd.	30000	44.20	13,26,000
Cash			2,40,800
			10,27,87,200

NAV as on 2nd April 2009 = $\frac{₹10,27,87,200}{842000}$ = ₹ 122.075 per unit

6. CAPM = $R_f + \beta (R_m - R_f)$

According

$R_{ABC} = R_f + 1.2 (R_m - R_f) = 19.8$

$R_{XYZ} = R_f + 0.9 (R_m - R_f) = 17.1$

$19.8 = R_f + 1.2 (R_m - R_f)$ ------(1)

$17.1 = R_f + 0.9 (R_m - R_f)$ ------(2)

Deduct (2) from (1)

$2.7 = 0.3 (R_m - R_f)$

$R_m - R_f = 9$

$R_f = R_m - 9$

Substituting in equation (1)

$19.8 = (R_m - 9) + 1.2 (R_m - R_m + 9)$

$19.8 = R_m - 9 + 10.8$

$19.8 = R_m + 1.8$

Then R_m = 18% and R_f = 9%

Security Market Line = $R_f + \beta$ (Market Risk Premium)

= 9% + β´ 9%

7. (i) Expected Return on X Ltd.'s Share

Average % Annual Capital Gain [197 ¸ 95] ¼ -1 = 0.20 i.e 20%

© The Institute of Chartered Accountants of India

Average % dividend yield: $\frac{10\% + 12\% + 8\% + 10\% + 10\%}{5} = 10\%$

Therefore, expected return on share of X Ltd. = 20% + 10% = 30%

(ii) Expected Return on Market Index

Average Annual % Capital gain

$[2182 \div 1490]^{1/4} - 1 = 0.10$ i.e. 10%

Average % of dividend yield

$\frac{16\% + 15\% + 16\% + 10\% + 18\%}{5} = 15\%$

Thus, expected return on Market Index = 10% + 15% = 25%

(iii) Return from Central Govt. Securities

$\frac{15\% + 15\% + 16\% + 14\% + 15\%}{5} = 15\%$

Thus, Risk Free Rate of Return = R_f = 15%

(iv) Beta Value of X Ltd.

$E(R_x) = R_f + [E(R_m) - R_f]\ \beta_x$

Accordingly,

$\frac{E(R_x) - R_f}{E(R_m) - R_f} = \beta_x = \frac{30\% - 15\%}{25\% - 15\%} = \frac{15}{10} = 1.50$

8. (a) Net Assets Method

To compute the value of shares as per this method we shall compute the Net Assets.

(i) Value of Land & Building of XYZ Ltd. = ₹ 1,500 lac $(1.25)^4$ = ₹ 3,662.11 lac.

Thus, net asset value will be:

	₹
Land & Building	3,662.11 lac
Plant & Machinery	2,800.00 lac
Account Receivable	2,400.00 lac
Stock	2,100.00 lac
Bank/Cash	400.00 lac
	11,362.11 lac

© The Institute of Chartered Accountants of India

Less: Bank Overdraft	100.00 lac
Sundry Creditors	1,100.00 lac
Tax Payable	400.00 lac
Dividend Payable	400.00 lac
Long Term Loan	1,000.00 lac
	8362.11 lac

(ii) Estimated profit for next 5 years

= ₹ 1,510 lac (1.12) + ₹ 1,510 lac $(1.12)^2$ + ₹ 1,510 lac $(1.12)^3$ + ₹ 1,510 lac $(1.12)^4$ + ₹ 1,510 lac $(1.12)^5$

= ₹ 1,691.20 lac + ₹ 1,894.14 lac + ₹ 2,121.44 lac + ₹ 2,376.01 lac + ₹ 2,661.14 lac = ₹ 10,743.93 lac.

The total yield value= ₹ 8,362.11 lac + ₹ 10,743.93 lac = ₹ 19,106.04 lac

XYZ Ltd.s share's current market value = ₹ 470 x 40 lacs shares = ₹ 1,88,00,00,000 = ₹ 18,800 lac

The premium is thus ₹ 306.04 lac (₹ 19,106.04 lac – ₹ 18,800 lac) i.e. ₹ 7.65 per share or 1.63% [7.65/470].

This is not a sound basis for valuation as it ignores the time value of money. The premium of 1.63% above the current market price is very small compared to those achieved in many real bids.

(b) Dividend Valuation Model

$$Po = \frac{D_1}{K_e - g} = \frac{D_0(1+g)}{K_e - g}$$

$$D_0 = \frac{₹\ 760\ lac}{40\ lac} = ₹\ 19 \text{ per share.}$$

Thus D_1 = ₹ 19(1+0.12) = ₹ 21.28

K_e using CAPM

$K_e = R_f + \beta_j (R_m - R_f)$ =10% + 1.05(16% - 10%) = 16.3%

$$P_0 = \frac{₹\ 21.28}{16.3\% - 12\%} = \frac{₹\ 21.28}{4.3\%} = ₹\ 494.88 \text{ per share}$$

The premium is ₹ 24.88 (₹ 494.88 – ₹ 470) i.e. 5.29% above the current market price.

Thus, this method should be used for bidding shares of XYZ Ltd.'s share

© The Institute of Chartered Accountants of India

Assumptions

- Valuation is based on a constant growth rate and unchanged dividend policy.
- It will be more rational to assess the value of XYZ Ltd. incorporating post merger synergies.

9. First necessary adjustment of the data as reported by historical accounting system shall be made as follows:

	₹
Operating Profit	20,20,00,000
Add: Cost of unutilized Advertisement Expenditures	2,00,00,000
	22,20,00,000

Invested Capital (as per replacement cost) is ₹ 84 crore.

Accordingly,

EVA = Operating Profit – (Invested Capital x Cost of Capital)

= ₹ 22,20,00,000 – ₹ 84 crore x 11%

= ₹ 22.2 crore – ₹ 9.24 crore

= ₹ 12.96 crore.

10. To compute the return on investment we shall first compute profit on short sale which will be as follows:

=Beginning value – Ending value – Dividends – Trans. Cost – Interest

Accordingly beginning value of investment

= £5.60 x 10000=£56000

Mr. V's investment	= Margin Requirement + Commission
	= 0.45´ £56000 + £1550
	= £25200 + £1550 = £26750
Ending value of investment	= £4.50´ 10000 = £45000
(Closing out position)	
Dividend	= £0.25 ´ 10000 = £2500
Transaction cost	= £1550 + £1450 = £3000
Thus,	
Profit	= £56000 - £45000 – £2500 - £3000 = £5500
The rate of return on investment will	= £5500/£26750 = 20.56%

© The Institute of Chartered Accountants of India

11. (a) First we shall compute annual interest rate as follows:

Annual interest rate = $(1.024)^2 – 1 = 4.9\%$

Thus, pre tax interest = 4.9% + 1% = 5.9%

and post tax interest rate = 5.9% (1 - 0.30) = 5.9% ´ 0.70 = 4.13%

(b) Working Notes

Calculation of tax saving on depreciation (₹)

Year	Opening value	Depreciation	Closing value	Tax saving @ 30%
1	10,00,00,000	2,00,00,000	8,00,00,000	60,00,000
2	8,00,00,000	1,60,00,000	6,40,00,000	48,00,000
3	6,40,00,000	1,28,00,000	5,12,00,000	38,40,000
4	5,12,00,000	1,02,40,000	4,09,60,000	30,72,000
5	4,09,60,000	(90,40,000)*	5,00,00,000	(27,12,000)

*Short term capital gain assuming that no block of asset exists.

Statement showing NPV of lease option

Particulars	Period	Cash flow (₹)	4%		5%	
			PVF	PV (₹)	PVF	PV (₹)
Lease payment	0-4	(150,00,000)	4.630	(6,94,50,000)	4.546	(6,81,90,000)
Tax Benefit	1-5	45,00,000	4.452	2,00,34,000	4.329	1,94,80,500
NPV (A)				(4,94,16,000)		(4,87,09,500)

Statement showing NPV in borrow & buy decision

	Period	Cash flow (₹)	4%		5%	
			PVF	PV (₹)	PVF	PV (₹)
Initial outlay	0	(10,00,00,000)	1.00	(10,00,00,000)	1.00	(10,00,00,000)
	1	-	0.962	-	0.962	-
	2	60,00,000	0.925	55,50,000	0.907	54,42,000
	3	48,00,000	0.889	42,67,200	0.864	41,47,200
	4	38,40,000	0.855	32,83,200	0.823	31,60,320
	5	30,72,000	0.822	25,25,184	0.784	240,84,48
	6	(27,12,000)	0.790	(21,42,480)	0.746	(20,23,152)
Terminal Value	5	5,00,00,000	0.822	4,11,00,000	0.784	3,92,00,000
NPV (B)				(4,54,16,896)		(4,76,65,184)
Net NPV (A)-(B)				(39,99,104)		(10,44,316)

© The Institute of Chartered Accountants of India

(c) The break even post box tax cost of department can be calculated by using extrapolation formula from the data as per (b) above.

$$4\% + \frac{3999104}{3999104 - 1044316}(5\% - 4\%)$$

$$4\% + \frac{3999104}{2954788} \times 1\%$$

4% + 1.35% = 5.35%

(d) Since the Break Even Post Tax Cost of Debt in the NPV appraisal is 5.35%, which is higher than the actual post tax cost of borrowing of 4.1%.

On this basis of it is recommended the corporation should go for borrow and buy option instead of lease option.

12. (1) $\beta_{company} = \beta_{equity} \times \frac{V_E}{V_0} + B_{debt} \times \frac{V_D}{V_0}$

Note: Since b_{debt} is not given it is assumed that company debt capital is virtually riskless.

If company's debt capital is riskless than above relationship become:

Here

$$\beta_{assets} = \beta_{equity} \frac{V_E}{V_0}$$

$b_{debt} = 0$

V_E = ₹ 60 lakhs.

V_D = ₹ 40 lakhs.

V_0 = ₹ 100 lakhs.

$$\beta_{company\ assets} = 1.5 \times \frac{₹\ 60\ lakhs}{₹\ 100\ lakhs} = 0.9$$

(2) Company's cost of capital = $R_f + b_A \times$ Risk premium

Where R_f = Risk free rate of return

b_A = Beta of company assets

Therefore, company's cost of capital = 8% + 0.9 × 10 = 17%

In case of expansion of the company's present business, the same rate of return i.e. 17% will be used. However, in case of diversification into new business the risk

© The Institute of Chartered Accountants of India

profile of new business is likely to be different. Therefore, different discount factor has to be worked out for such business.

13. (a) Assume Mr. Shekhar opens the mine at t = 0. Taking into account the distribution of possible future prices of zinc over the next 3 years, we have:

$$NPV = -100{,}000 + \frac{1{,}000 \times [(0.5 \times 550) + (0.5 \times 450) - 460]}{1.10}$$

$$+ \frac{1{,}000 \times [(0.5^2) \times (600 + 500 + 500 + 400) - 460]}{1.10^2}$$

$$+ \frac{1{,}000 \times [(0.5^3) \times (650 + 550 + 550 + 550 + 450 + 450 + 450 + 350) - 460]}{1.10^3} = -₹\ 526$$

Because this NPV is negative, Mr. Shekhar should not open the mine at t = 0. Further, we know that it does not make sense to plan to open the mine at any price less than or equal to ₹ 500 per Kg.

(b) Assume we wait until t = 1 and then open the mine if the price is ₹ 550. At that point if the price reaches ₹ 550 and it is expected that price for all future periods is ₹ 550 then NPV will be:

$$NPV = -100{,}000 + \sum_{t=1}^{3} \frac{1{,}000 \times (₹\,550 - ₹\,460)}{1.10^t} = ₹\,23{,}816$$

The NPV, at t = 0, of this NPV at t = 1 is: ₹ 123,816/1.10 = ₹ 1,12,561

If it is expected that price for all future periods is likely to rise and fall by ₹ 50 per kg then NPV will be:

$$NPV = -100{,}000 + \frac{1{,}000 \times [(0.5 \times 600) + (0.5 \times 500) - 460]}{1.10}$$

$$+ \frac{1{,}000 \times [(0.5^2) \times (650 + 550 + 550 + 400) - 460]}{1.10^2}$$

$$+ \frac{1{,}000 \times [(0.5^3) \times (700 + 600 + 600 + 600 + 500 + 500 + 500 + 400) - 460]}{1.10^3} =$$

₹ 1,13,486

The NPV, at t = 0, of this NPV at t = 1 is: ₹ 1,13,486/1.10 = ₹1,03,169

Thus, if the price rises to ₹ 550 at t = 1, we should open the mine at that time and the expected NPV of this strategy will be:

(0.50 × ₹ 1,12,561) + (0.50 × ₹ 0) = ₹ 56,281 or (0.50 × ₹ 1,03,169) + (0.50 × ₹ 0) = ₹ 51,585

© The Institute of Chartered Accountants of India

Diagrams

Decision Tree if Mr. Shekhar opens the mine now

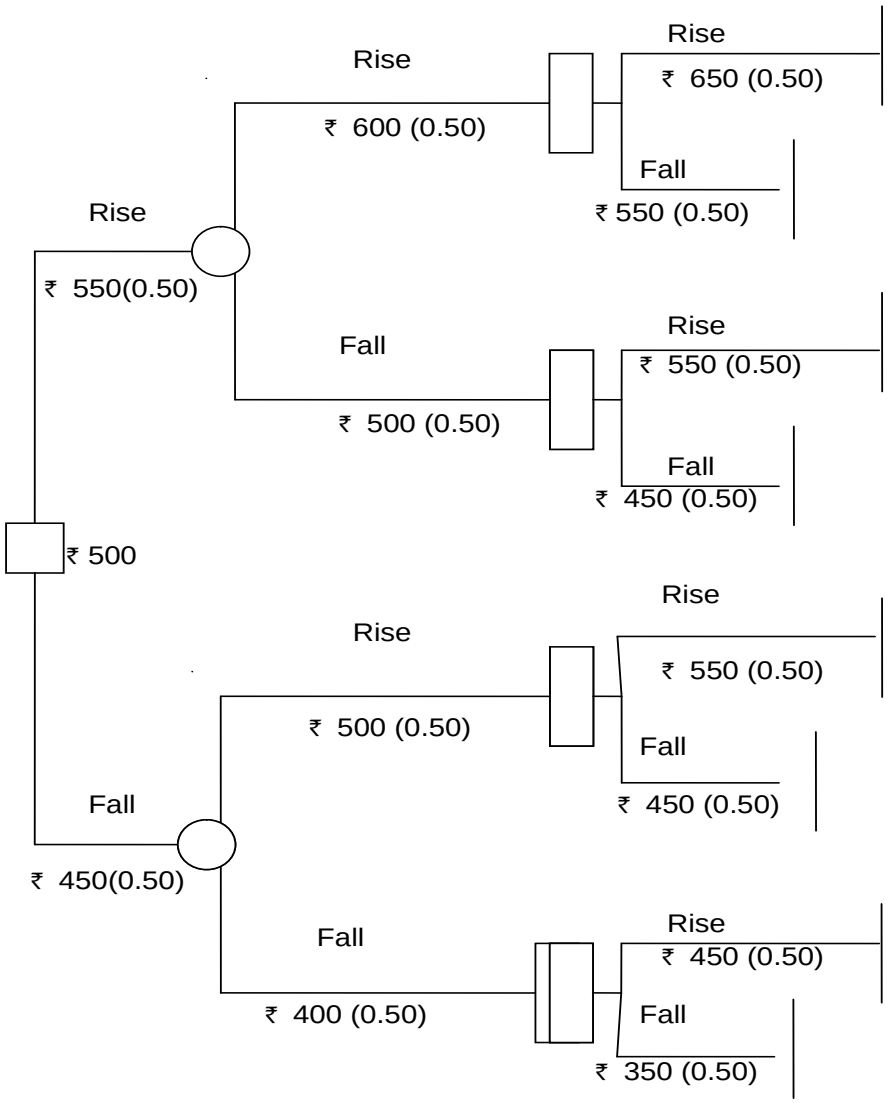

© The Institute of Chartered Accountants of India

Decision Tree if Mr. Shekhar opens mine one year hence

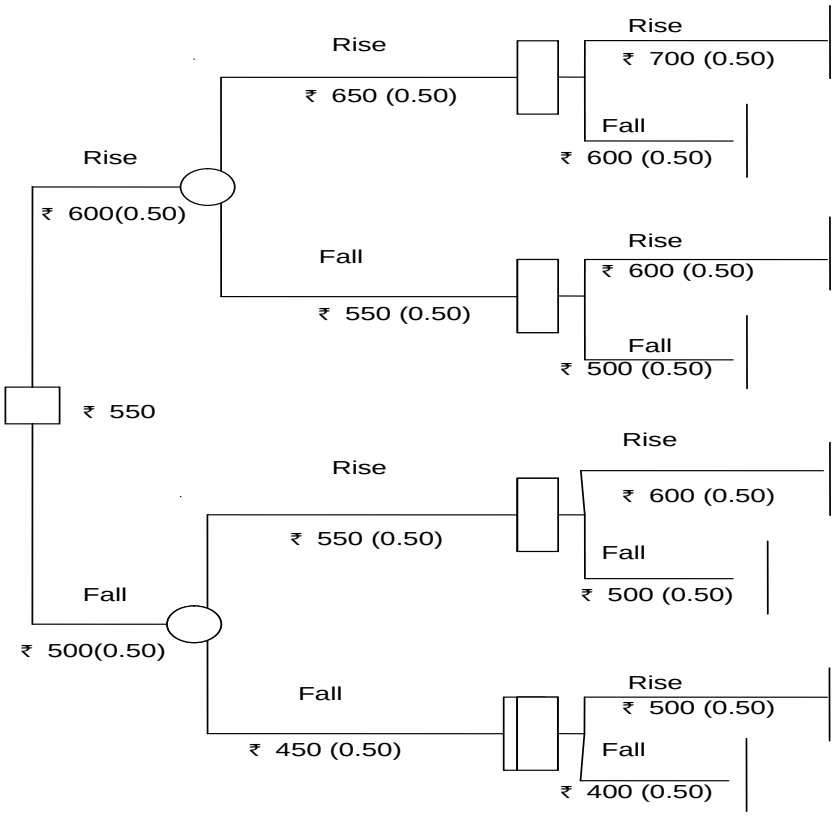

14.

	₹ *lakhs*
Net Assets Method	
Assets: Land & Buildings	96
Plant & Machinery	100
Investments	10
Stocks	20
Debtors	15
Cash & Bank	5
Total Assets	246
Less: Creditors	30
Net Assets	216

© The Institute of Chartered Accountants of India

Value per share

(a) Number of shares $\frac{1,00,00,000}{10} = 10,00,000$

(b) Net Assets ₹ 2,16,00,000

$\frac{₹\ 2,16,00,000}{10,00,000} =$ ₹.21.60

Profit-earning Capacity Method		₹ *lakhs*
Profit before tax		64.00
Less: Extraordinary income	4.00	
Investment income (not likely to recur)	1.00	5.00
		59.00
Less: Additional expenses in forthcoming years		
Advertisement	5.00	
Depreciation	6.00	11.00
Expected earnings before taxes		48.00
Less: Income-tax @ 30%		14.40
Future maintainable profits (after taxes)		33.60

Value of business

Capitalisation factor	$\frac{33.60}{0.15} =$	224
Less:External Liabilities (Creditors)		30
		194
Value per share	$\frac{1,94,00,000}{10,00,000} =$ ₹ 19.40	

Fair Price of share	₹
Value as per Net Assets Method	21.60
Value as per Profit earning capacity (Capitalisation) method	19.40
Fair Price= $\frac{21.60 + 19.40}{2} = \frac{41}{2} =$	20.50

© The Institute of Chartered Accountants of India

15. (a) Calculation of Market price:

$$YTM = \frac{\text{Coupon interest} + \left(\frac{\text{Discount or premium}}{\text{Years left}}\right)}{\frac{\text{Face Value} + \text{Market value}}{2}}$$

Discount or premium – YTM is more than coupon rate, market price is less than Face Value i.e. at discount.

Let x be the market price

$$0.17 = \frac{160 + \left(\frac{(1{,}000 - x)}{6}\right)}{\frac{1{,}000 + x}{2}}$$

x = ₹ 960.26

Alternatively, the candidate may attempt by

160 (PVIFA 17%,6) + 1,000 (PVIF 17%,6)

= 160 (3.589) + 1,000 (0.390)

= 574.24 + 390

= 964.24

(b) Duration

Year	Cash flow	PVF @ 17%	PV	Proportion of bond value	Proportion of bond value x time (years)
1	160	0.855	136.80	0.142	0.142
2	160	0.731	116.96	0.121	0.242
3	160	0.624	99.84	0.103	0.309
4	160	0.534	85.44	0.089	0.356
5	160	0.456	72.96	0.076	0.380
6	1160	0.390	452.40	0.469	2.814
			964.4	1.000	4.243

Duration of the Bond is 4.243 years

(c) Volatility

$$\text{Volatility of the bonds} = \frac{\text{Duration}}{(1 + \text{yields})} = \frac{4.243}{1.17} = 3.63$$

© The Institute of Chartered Accountants of India

(d) The expected market price if increase in required yield is by 75 basis points.

= ₹ 960.26 ´ 0.75 (3.63/100)

= ₹ 26.142

Hence expected market price is ₹ 960.26 – ₹ 26.142 = ₹ 934.118

Hence, the market price will decrease

This portion can also be alternatively done as follows

= ₹ 964.40 ´ 0.75 (3.63/100)

= ₹ 26.26

then the market price will be

= ₹ 964.40 – 26.26 = ₹ 938.14

16. Calculation of Investment Amount

Amount required for making payment on 30th January, 2011	= ₹ 80,00,000
Investment in Certificates of Deposit (CDs) on 31st October, 2010	
Rate of interest	= 8% p.a.
No. of days to maturity	= 91 days
Interest on ₹ 1 of 91 days	
(₹ 1 × 0.08 × 91/365)	= 0.0199452
Amount to be received for Re. 1	
(₹ 1.00 + ₹ 0.0199452)	= 1.0199452

Calculation of amount to be invested now to get Rs. 80 lakhs after 91 days:

$$= \frac{₹\ 80,00,000}{₹\ 1.0199452}$$

= ₹ 78,43,558.65

or, ₹ 78,43,600 or ₹ 78,44,000 approximately.

17. (a) Calculation of initial outlay:-

		₹ (million)
a.	Face value	300
	Add:-Call premium	12
	Cost of calling old bonds	312

© The Institute of Chartered Accountants of India

b. Gross proceed of new issue	300
Less: Issue costs	6
Net proceeds of new issue	294
c. Tax savings on call premium and unamortized cost 0.30 (12 + 9)	6.3
\ Initial outlay = ₹312 million – ₹ 294 million – ₹ 6.3 million	= ₹ 11.7 million

(b) Calculation of net present value of refunding the bond:-

	₹ (million)
Saving in annual interest expenses [300 x (0.12 – 0.10)]	6.00
Less:- Tax saving on interest and amortization 0.30 x [6 + (9-6)/6]	1.95
Annual net cash saving	4.05
PVIFA (7%, 6 years)	4.766
\ Present value of net annual cash saving	= ₹ 19.30 million
Less:- Initial outlay	= ₹ 11.70 million
Net present value of refunding the bond	₹ 7.60 million

Decision: The bonds should be refunded

18. (i) Workings:

Asset turnover ratio	= 1.1
Total Assets	= ₹ 600
Turnover ₹ 600 lakhs × 1.1	= ₹ 660 lakhs
Effective market rate $\left(\frac{\text{Interest}}{\text{Liabilites}}\right)$	= 8% (Given)
Liabilities	= ₹ 125 lakhs + ₹ 50 lakhs = ₹ 175 lakh
Interest	= ₹ 175 lakhs × 0.08 = ₹ 14 lakh
Operating Margin	= 10%
Hence operating cost	= (1 - 0.10) ₹ 660 lakhs = ₹ 594 lakh
Dividend Payout	= 16.67%
Tax rate	= 40%

© The Institute of Chartered Accountants of India

Income statement

	(₹ Lakhs)
Sale	660
Operating Exp	594
EBIT	66
Interest	14
EBT	52
Tax @ 40%	20.80
EAT	31.20
Dividend @ 16.67%	5.20
Retained Earnings	26.00

(ii) SGR = G = ROE (1-b)

$$ROE = \frac{PAT}{NW} \text{ and } NW = ₹\,100\text{ lakh} + ₹\,300\text{ lakh} = ₹\,400\text{ lakh}$$

$$ROE = \frac{₹\,31.2\text{lakhs}}{₹\,400\text{lakhs}} \times 100 = 7.8\%$$

SGR = 0.078(1 - 0.1667) = 6.5%

(iii) Calculation of fair price of share using dividend discount model

$$P_o = \frac{D_0(1+g)}{k_e - g}$$

$$\text{Dividends} = \frac{₹\,5.2\text{lakhs}}{10\text{lakhs}} = ₹\,0.52$$

Growth Rate = 6.5%

$$\text{Hence } P_o = \frac{₹0.52(1+0.065)}{0.15 - 0.065} = \frac{₹\,0.5538}{0.085} = ₹\,6.51$$

(iv) Since the current market price of share is ₹ 14, the share is overvalued. Hence the investor should not invest in the company.

19. $$d_1 = \frac{\ln(S/E) + (r + \frac{\sigma^2}{2})t}{\sigma\sqrt{t}}$$

© The Institute of Chartered Accountants of India

$$= \frac{\ln(185/170) + (0.07 + \frac{0.18^2}{2})3}{0.18\sqrt{3}}$$

$$= \frac{\ln 1.0882 + (0.07 + 0.0162)3}{0.18\sqrt{3}}$$

$$= \frac{0.08452 + 0.2586}{0.18\sqrt{3}}$$

$$= \frac{0.34312}{0.31177}$$

$d_1 = 1.1006$

$d_2 = d_1 - s\sqrt{t}$

= 1.1006 – 0.3118 = 0.7888

$N(d_1) = 0.8770$ (from table)

$N(d_2) = 0.7848$

Value of option = $V_s\, N(d_1) - \frac{E}{e^{rt}} N(d_2)$

$$= 185\,(0.8770) - \frac{170}{e^{0.21}}(0.7848)$$

$$= 162.245 - \frac{170}{1.2336} \times 0.7848$$

= 162.245 – 108.152

= ₹ 54.093

20. (a) Many investment managers and stock market analysts believe that stock market prices can never be predicted because they are not a result of any underlying factors but are mere statistical ups and downs. This hypothesis is known as Random Walk hypothesis which states that the behaviour of stock market prices is unpredictable and that there is no relationship between the present prices of the shares and their future prices. Proponents of this hypothesis argue that stock market prices are independent. A British statistician, M. G. Kendell, found that changes in security prices behave nearly as if they are generated by a suitably designed roulette wheel for which each outcome is statistically independent of the past history. In other words, the fact that there are peaks and troughs in stock exchange prices is a mere statistical happening – successive peaks and troughs are

© The Institute of Chartered Accountants of India

unconnected. In the layman's language it may be said that prices on the stock exchange behave exactly the way a drunk would behave while walking in a blind lane, i.e., up and down, with an unsteady way going in any direction he likes, bending on the side once and on the other side the second time.

The supporters of this theory put out a simple argument. It follows that:

(i) Prices of shares in stock market can never be predicted. The reason is that the price trends are not the result of any underlying factors, but that they represent a statistical expression of past data.

(ii) There may be periodical ups or downs in share prices, but no connection can be established between two successive peaks (high price of stocks) and troughs (low price of stocks).

(b) The EMH theory is concerned with speed with which information effects the prices of securities. As per the study carried out technical analyst it was observed that information is slowly incorporated in the price and it provides an opportunity to earn excess profit. However, once the information is incorporated then investor can not earn this excess profit.

Level of Market Efficiency: That price reflects all available information, the highest order of market efficiency. According to FAMA, there exist three levels of market efficiency:-

Weak form efficiency – Price reflect all information found in the record of past prices and volumes.

Semi – Strong efficiency – Price reflect not only all information found in the record of past prices and volumes but also all other publicly available information.

Strong form efficiency – Price reflect all available information public as well as private.

(c) It is an option that allows the underwriting of an IPO to sell additional shares if the demand is high. It can be understood as an option that allows the underwriter for a new issue to buy and resell additional shares upto a certain pre-determined quantity.

Looking to the exceptional interest of investors in terms of over-subscription of the issue, certain provisions are made to issue additional shares or bonds to underwriters for distribution. The issuer authorises for additional shares or bonds. In common parlance, it is the retention of over-subscription to a certain extent. It is a special feature of euro-issues. In euro-issues the international practices are followed.

In the Indian context, green shoe option has a limited connotation. SEBI guidelines governing public issues contain appropriate provisions for accepting over-

© The Institute of Chartered Accountants of India

subscriptions, subject to a ceiling, say, 15 per cent of the offer made to public. In certain situations, the green-shoe option can even be more than 15 per cent.

Examples:

- IDBI had come–up earlier with their Flexi bonds (Series 4 and 5). This is a debt-instrument. Each of the series was initially floated for Rs. 750 crores. SEBI had permitted IDBI to retain an excess of an equal amount of Rs. 750 crores.
- ICICI had launched their first tranche of safety bonds through unsecured redeemable debentures of Rs. 200 crores, with a green shoe option for an identical amount.
- Infosys Technologies has exercised the green shoe option to purchase upto 7,82,000 additional ADSs representing 3,91,000 equity shares. This offer initially involved 5.22 million depository shares, representing 2.61 million domestic equity shares.

(d) The basic function of merchant banker or investment banker is marketing of corporate and other securities. In the process, he performs a number of services concerning various aspects of marketing, viz., origination, underwriting, and distribution, of securities. During the regime of erstwhile Controller of Capital Issues in India, when new issues were priced at a significant discount to their market prices, the merchant banker's job was limited to ensuring press coverage and dispatching subscription forms to every corner of the country. Now, merchant bankers are designing innovative instruments and perform a number of other services both for the issuing companies as well as the investors. The activities or services performed by merchant bankers, in India, today include:

(a) Project promotion services.

(b) Project finance.

(c) Management and marketing of new issues.

(d) Underwriting of new issues.

(e) Syndication of credit.

(f) Leasing services.

(g) Corporate advisory services.

(h) Providing venture capital.

(i) Operating mutual funds and off shore funds.

(j) Investment management or portfolio management services.

(k) Bought out deals.

© The Institute of Chartered Accountants of India

(l) Providing assistance for technical and financial collaborations and joint ventures.

(m) Management of and dealing in commercial paper.

(n) Investment services for non-resident Indians.

(e) Sensitivity analysis is used in Capital budgeting for more precisely measuring the risk. It helps in assessing information as to how sensitive are the estimated parameters of the project such as cash flows, discount rate, and the project life to the estimation errors. Future being always uncertain and estimations are always subject to error, sensitivity analysis takes care of estimation errors by using a number of possible outcomes in evaluating a project. The methodology adopted in sensitivity analysis is to evaluate a project by using a number of estimated cash flows so as to provide to the decision maker an insight into the variability of outcome. Thus, it is a technique of risk analysis which studies the responsiveness of a criterion of merit like NPV or IRR to variation in underlying factors like selling price, quantity sold, returns from an investment etc.

Sensitivity analysis answers questions like,

(i) What happens to the present value (or some other criterion of merit) if flows are, say Rs. 50,000 than the expected Rs. 80,000?

(ii) What will happen to NPV if the economic life of the project is only 3 years rather than expected 5 years?

Therefore, wherever there is an uncertainty, of whatever type, the sensitivity analysis plays a crucial role. However, it should not be viewed as the method to remove the risk or uncertainty, it is only a tool to analyse and measure the risk and uncertainty. In terms of capital budgeting the possible cash flows are based on three assumptions:

(a) Cash flows may be worst (pessimistic)

(b) Cash flows may be most likely.

(c) Cash flows may be most optimistic.

Sensitivity analysis involves three steps

(1) Identification of all those variables having an influence on the project's NPV or IRR.

(2) Definition of the underlying quantitative relationship among the variables.

(3) Analysis of the impact of the changes in each of the variables on the NPV of the project.

The decision maker, in sensitivity analysis always asks himself the question – what if?

© The Institute of Chartered Accountants of India